# Custom Norton Commando Wiring Diagram - DRP

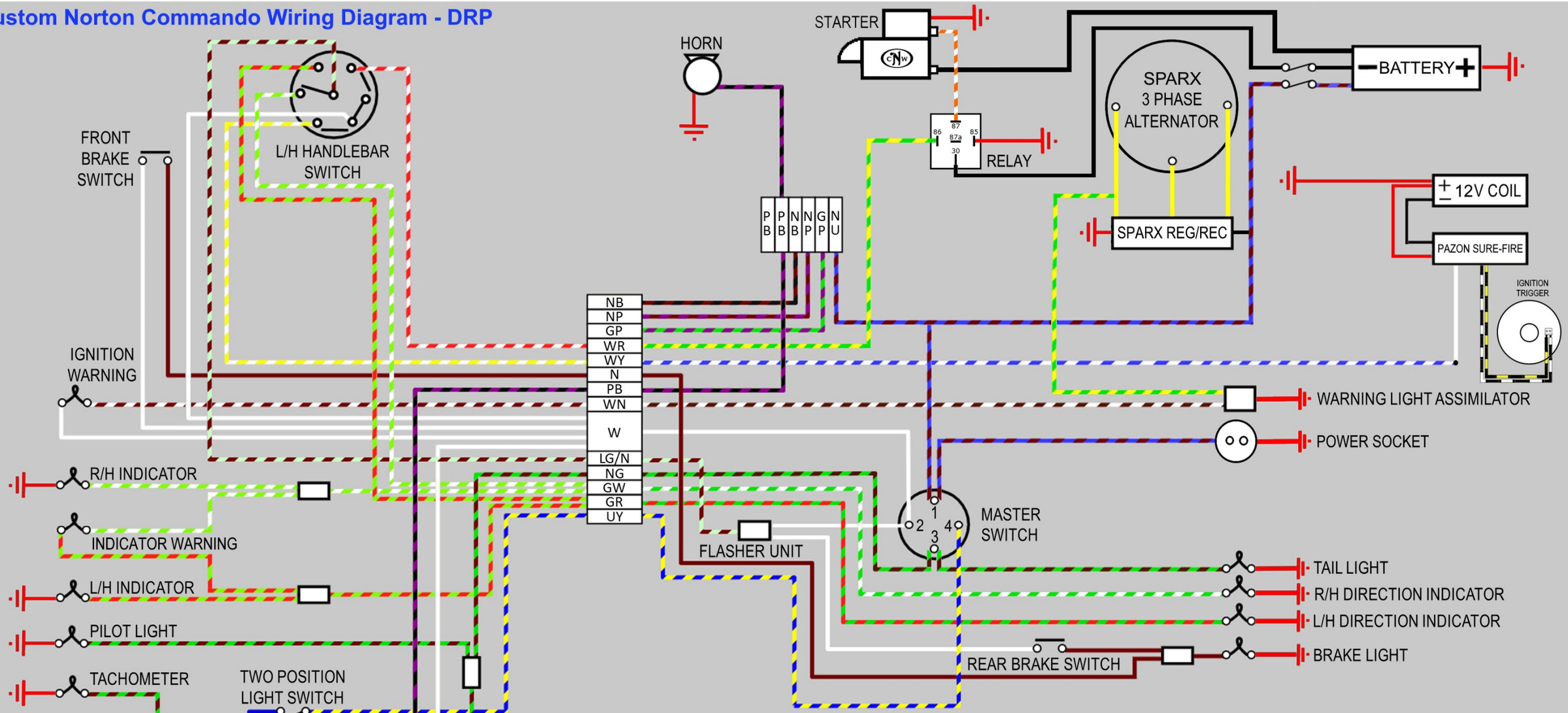


## COMMENTS

*edited by Grant Tiller February 2022*

- Removed factory points, condenser and ballast resistor
- Added Pazon Sure-Fire electronic ignition
- Removed factory pair of 6 volt ignition coils and added 12 volt dual output single tower ignition coil
- Removed factory capacitor, zener diode and rectifier
- Added Sparx combined regulator and rectifier unit and 3 phase alternator
- Added Colorado Norton Works Electric Start Conversion - note this uses the JD191L2-12V relay and loom supplied by cNw, but uses the factory starter button
- Standard wiring is Positive Earth - that is to say the RED (POSITIVE) wire goes FROM the battery TO the frame

Tiller www.granttiller.com